UNIVERSITY OF CAMBRIDGE INTERNATIONAL EXAMINATIONS
General Certificate of Education
Advanced Subsidiary Level and Advanced Level

CANDIDATE NAME	
CENTRE NUMBER	
CANDIDATE NUMBER	

5019008129

PHYSICS **9702/32**

Paper 32 Advanced Practical Skills 2 **May/June 2007**

2 hours

Candidates answer on the Question Paper.

Additional Materials: As listed in the Confidential Instructions.

READ THESE INSTRUCTIONS FIRST

Write your Centre number, candidate number and name on all the work you hand in.
Write in dark blue or black pen.
You may use a soft pencil for any diagrams, graphs or rough working.
Do not use staples, paper clips, highlighters, glue or correction fluid.
DO **NOT** WRITE ON ANY BARCODES.

Answer **all** questions.
You will be allowed to work with the apparatus for a maximum of one hour for each question.
You are expected to record all your observations as soon as these observations are made, and to plan the presentation of the records so that it is not necessary to make a fair copy of them. The working of the answers is to be handed in.
Additional answer paper and graph paper should be submitted only if it becomes necessary to do so.
You are reminded of the need for good English and clear presentation in your answers.

At the end of the examination, fasten all your work securely together.
All questions in this paper carry equal marks.

For Examiner's Use	
1	
2	
Total	

This document consists of **8** printed pages and **4** blank pages.

© UCLES 2007

BLANK PAGE

For Examiner's Use

You may not need to use all of the materials provided.

1 In this experiment you will measure the current I through a resistor R_3 as its resistance is changed.

(a) (i) Use the voltmeter to measure the e.m.f. E of the power supply.

E = ... V

(ii) Connect the circuit shown in Fig. 1.1. R_1 and R_2 are labelled, and R_3 may be chosen from any one of the remaining resistors. Each resistor carries a label indicating its resistance.

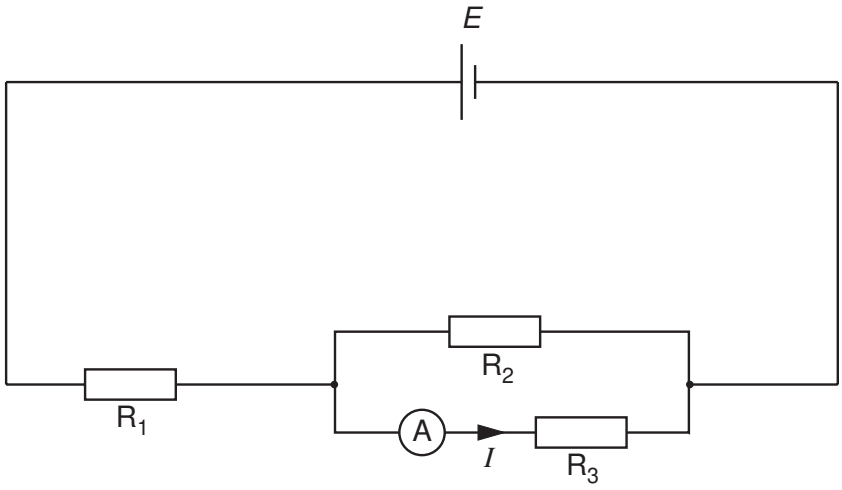

Fig. 1.1

(iii) Record the values of the current I and the resistance R_3 of resistor R_3.

I = ... A

R_3 = ... Ω

© UCLES 2007

[Turn over

For Examiner's Use

(b) Change the resistor R_3 and repeat **(a)(iii)** until you have six sets of readings for I and R_3. Include values of $\frac{1}{I}$ in your table of results.

(c) **(i)** Plot a graph of $\frac{1}{I}$ (y-axis) against R_3 (x-axis).

(ii) Draw the line of best fit.

(iii) Determine the gradient and the y-intercept of the graph.

gradient = ...

y-intercept = ...

© UCLES 2007

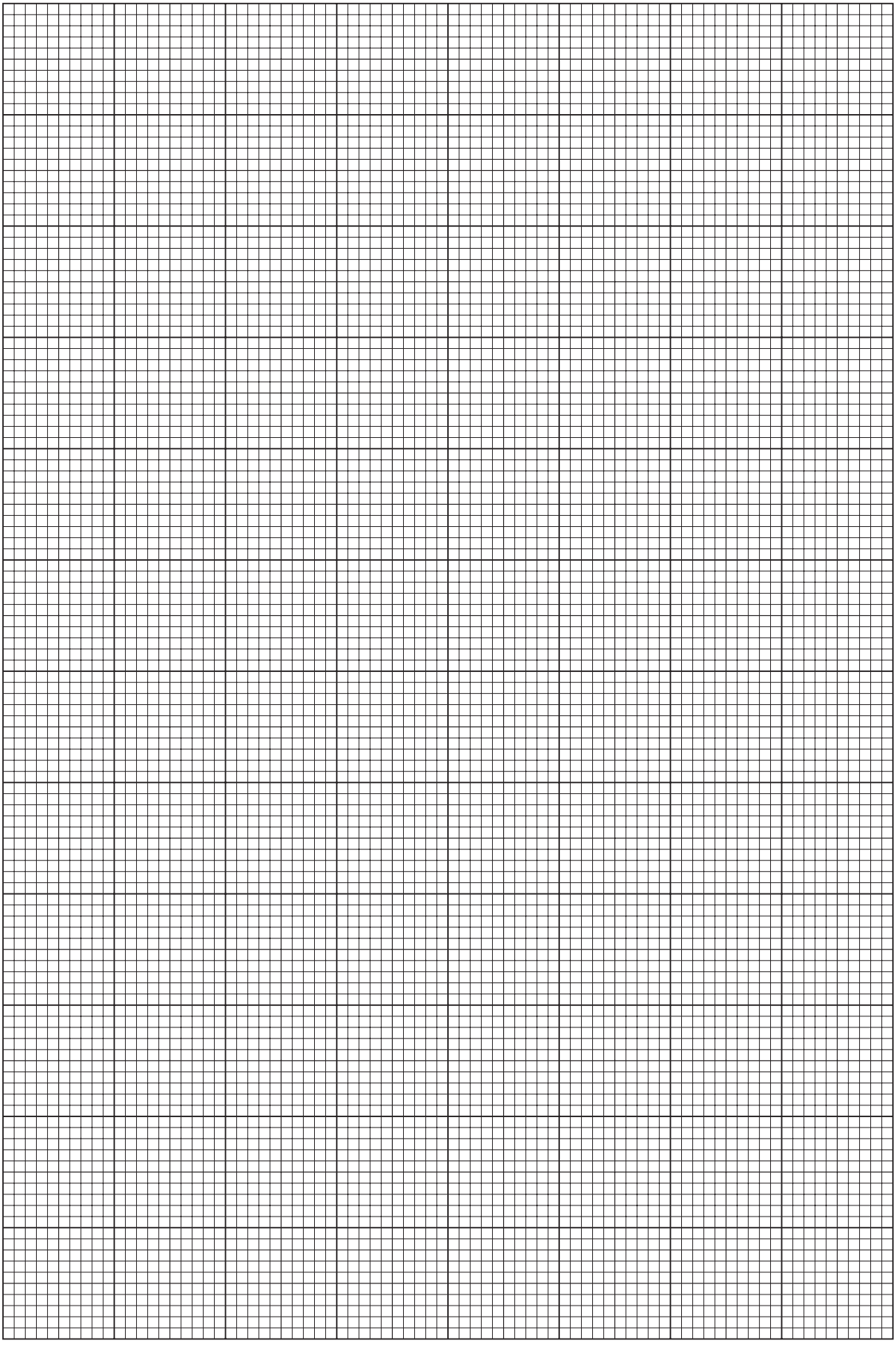

(d) The relationship between I and R_3 is

$$\frac{1}{I} = \left(\frac{R_1 + R_2}{ER_2}\right)R_3 + \frac{R_1}{E}$$

where R_1 is the resistance of the resistor R_1, R_2 is the resistance of the resistor R_2, and E is the e.m.f. of the power supply.
Using your answers from **(a)(i)** and **(c)(iii)**, determine values of R_1 and R_2.

R_1 = ...

R_2 = ...

© UCLES 2007

BLANK PAGE

You may not need to use all of the materials provided.

2 In this experiment you will investigate how the rebound height h of a table-tennis ball is related to the height d from which it is dropped.

If air resistance is ignored, then theory predicts that

$$e = \sqrt{\frac{h}{d}}$$

where e is a constant. Air resistance may be ignored if $d < 40$ cm.

(a) (i) Mount a half-metre rule vertically using a stand, boss and clamp.

(ii) Place the table-tennis ball next to the rule and record d. Release the ball and make measurements to determine the rebound height h, as shown in Fig. 2.1.

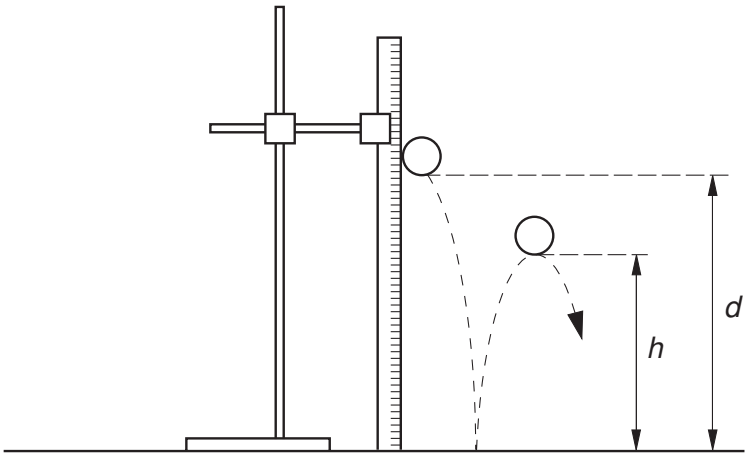

Fig. 2.1

d = ...

h = ...

(iii) Explain how you used the apparatus to ensure that the rebound height h was measured as accurately as possible.

.....

.....

.....

.....

For Examiner's Use

(iv) Estimate the percentage uncertainty in h.

percentage uncertainty in h = ...

(v) Calculate a value for e.

e = ...

(b) Repeat **(a)(ii)** and **(b)(v)** using a different value of d.

d = ...

h = ...

e = ...

(c) Do the results of your experiment indicate that e is a constant within the limits of experimental accuracy? Explain your reasoning clearly.

.....

.....

.....

.....

For Examiner's Use

(d) (i) State four sources of error or limitations of the procedure in this experiment.

1. .....

.....

2. .....

.....

3. .....

.....

4. .....

.....

(ii) Suggest four improvements that could be made to this experiment. You may suggest the use of other apparatus or different procedures.

1. .....

.....

2. .....

.....

3. .....

.....

4. .....

.....

© UCLES 2007

BLANK PAGE

BLANK PAGE

Permission to reproduce items where third-party owned material protected by copyright is included has been sought and cleared where possible. Every reasonable effort has been made by the publisher (UCLES) to trace copyright holders, but if any items requiring clearance have unwittingly been included, the publisher will be pleased to make amends at the earliest possible opportunity.

University of Cambridge International Examinations is part of the Cambridge Assessment Group. Cambridge Assessment is the brand name of University of Cambridge Local Examinations Syndicate (UCLES), which is itself a department of the University of Cambridge.